ZINK

# Thea Conduit Mount PIR sensor

INS ZN 31805 - C

SPECIFICATION:

Power Source: 220-240V/AC

Power Frequency: 50/60Hz

Ambient Light: <3-2000LUX (adjustable)

Time Delay: Min.10sec±3sec
Max.30min±2min

Rated Load: Max.1200W
600W LED

Detection Range: 360°

Detection Distance: 8 m max(<24°C)

Working Temperature: -20~+40°C

Working Humidity: <93%RH

Power Consumption: approx 0.5W

Installation Height: 2.2-4m

Detection Moving Speed: 0.6-1.5m/s

This product should be disposed of responsibly at the end of its life. Please recycle where facilities exist. Check with your Local Authority or retailer for recycling advice
(Waste Electrical and Electronic Equipment Directive)

UK CA CE

FUNCTION:

The Sensor can identify day and night: you can adjust its settings to operate in differing levels of ambient light.
when on the Max 'sun' setting, the lights will operate all day. When set to the minimum >3LUX it will only operate at night.

Once activated the light will operate for the set time, this will reset each time the sensor is triggered.

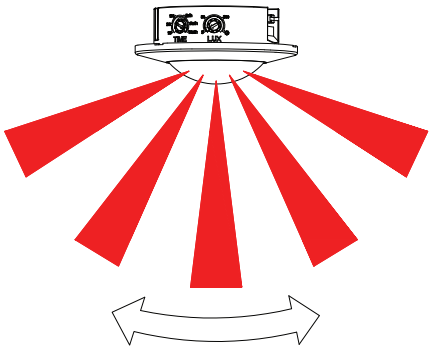

Good sensitivity

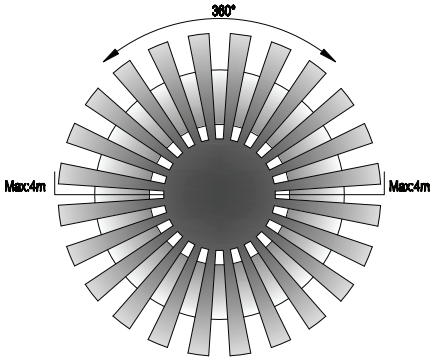


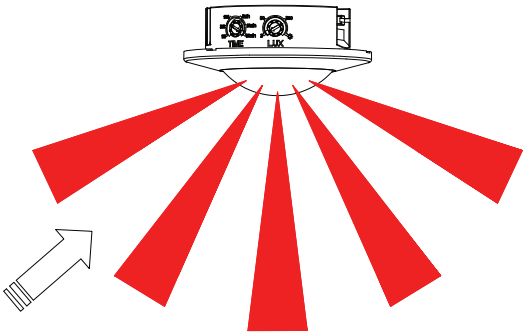

Poor sensitivity

INSTALLATION ADVICE:

As the detector responds to changes in temperature, avoid the following situations:

Avoid pointing the detector towards objects with highly reflective surfaces, like mirrors etc.

Avoid mounting the detector near heat sources as heating vents, air conditionings, light etc.

Avoid pointing the detector towards objects that may move in the wind, such as curtains, tall plants etc.

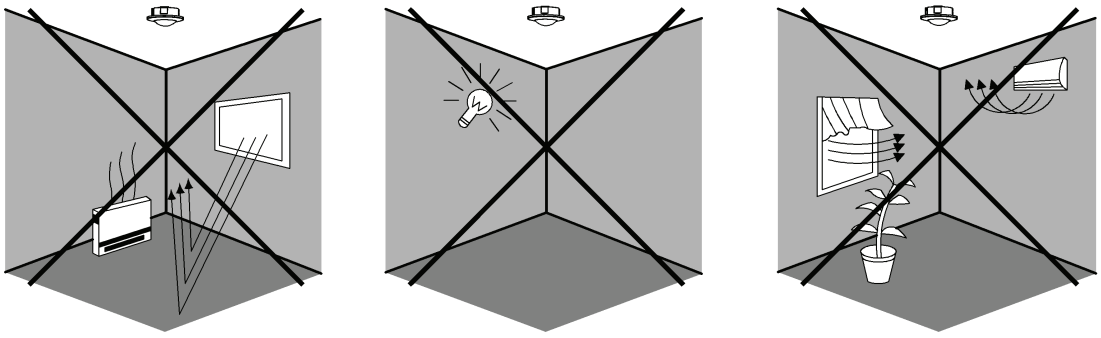

CONNECTION:

Warning. Danger of death through electric shock!

- Must be installed by professional electrician.
- Disconnect power source.
- Cover or shied any adjacent live components.
- Ensure device cannot be switched on.
- Check power supply is disconnected.

## Method 1: Standard mounting:

Remove the metal springs from the sensor.
Mount the backplate onto the mounting surface.
Connect the power and the load according to the connection-wire diagram.
Fix the terminal cover on to the sensor unit.
Install back the upper cover on the sensor, then switch on the power and test it.

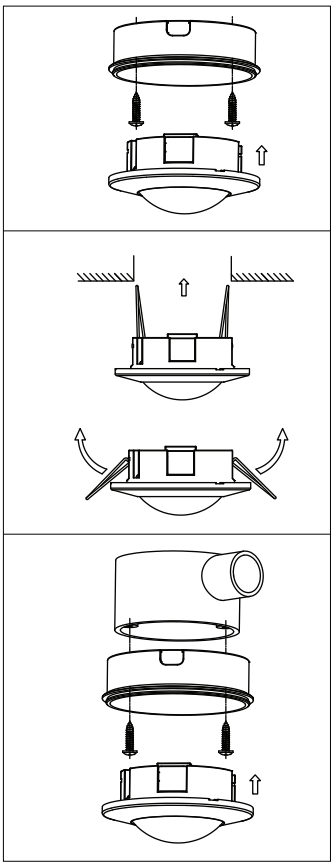

## Method 2: Recessed mounting:

You need a hole 62mm Diameter for inserting the sensor.
Connect the power and the load according to the connection-wire diagram.
Fold the metal spring of the sensor upwards, until they are in “I” position with sensor, and then put the sensor into the hole or installation box which is on the ceiling and has the similar size with the sensor. Releasing the spring, the sensor will be set in this installation position.
After finishing installing, turn on the power and then test it.

## Method 3: Conduit Box mounting:

Remove the metal springs from the sensor.
Mount the backplate onto the Conduit Box. (not supplied)
Connect the power and the load according to the connection-wire diagram.
Fix the terminal cover on to the sensor unit.
Install back the upper cover on the sensor, then switch on the power and test it.

## CONNECTION-WIRE DIAGRAM:
(See the image below)

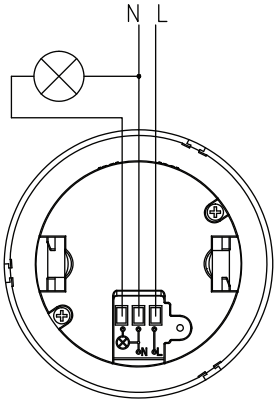


## SENSOR INFORMATION:
(See the image below)

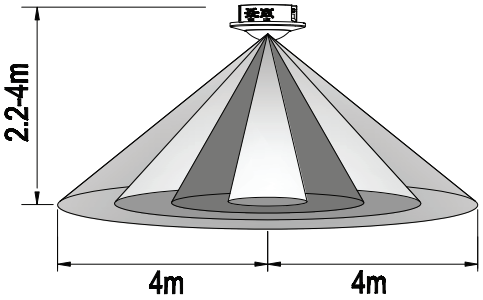


Height of installation: 2.2-4m

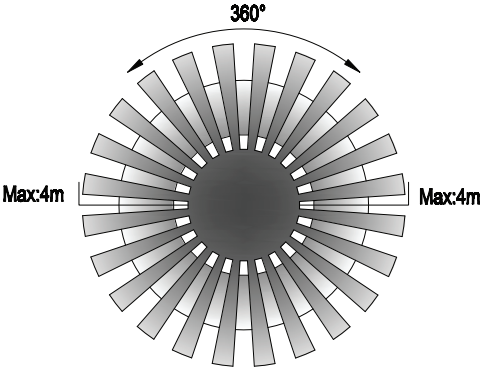


Detection Distance: Max.8m

Turn the TIME knob anti-clockwise on the minimum (10S).
Turn the LUX knob clockwise on the maximum (sun).

Switch on the power; the sensor and its connected lamp will have no signal at the beginning. After Warm-up 30sec, the sensor can start to work .If the sensor receives the induction signal, the lamp will turn on. While there is no another induction signal any more, the load should stop working within 10sec±3sec and the lamp would turn off.

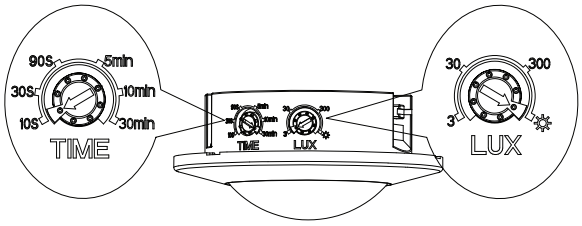


Turn LUX knob anti-clockwise on the minimum (3). If the ambient light is more than 3LUX, the sensor would not work and the lamp stop working too. If the ambient light is less than 3LUX (darkness), the sensor would work. Under no induction signal condition, the sensor should stop working within 10sec±3sec.

Note: when testing in daylight, please turn LUX knob to ☼ (SUN) position, otherwise the sensor lamp could not work!

SOME PROBLEM AND SOLVED WAY:

The load does not work:
- a. Please check if the connection of power source and load is correct.
- b. Please check if the load is good.
- c. Please check if the settings of working light correspond to ambient light.

The sensitivity is poor:
- a. Please check if there is any hindrance in front of the detector to affect it to receive the signals.
- b. Please check if the ambient temperature is too high.
- c. Please check if the induction signal source is in the detection field.
- d. Please check if the installation height corresponds to the height required in the instruction.
- e. Please check if the moving orientation is correct.

The sensor can not shut off the load automatically:
- a. Please check if there is continual signal in the detection field.
- b. Please check if the time delay is set to the maximum position
- c. Please check if the power corresponds to the instruction.

### Helpline

If you receive this item with parts broken or missing, please telephone:

0333 0050077

Please have ready your name, address, tel. no., product reference, where purchased and parts required. An answering service is in operation outside office hours and during busy periods. We regret that we are unable to give advice on internal house wiring.

Cascade Holdings Ltd, Gorse Mill,
Gorse Street, Chadderton, Oldham. OL9 9RJ

EU Authorised Representative:
Authorised Rep Compliance, Ground Floor
71 Lower Baggot Street, Dublin, Ireland
D02P593.