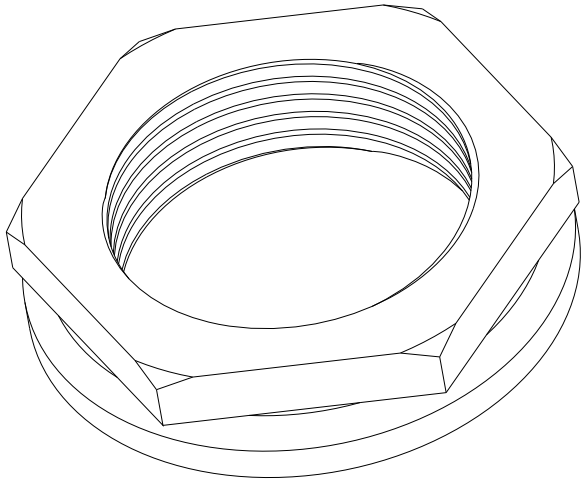

Isometric view

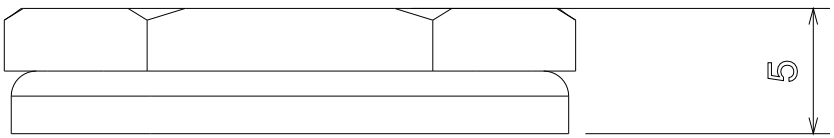

Side view

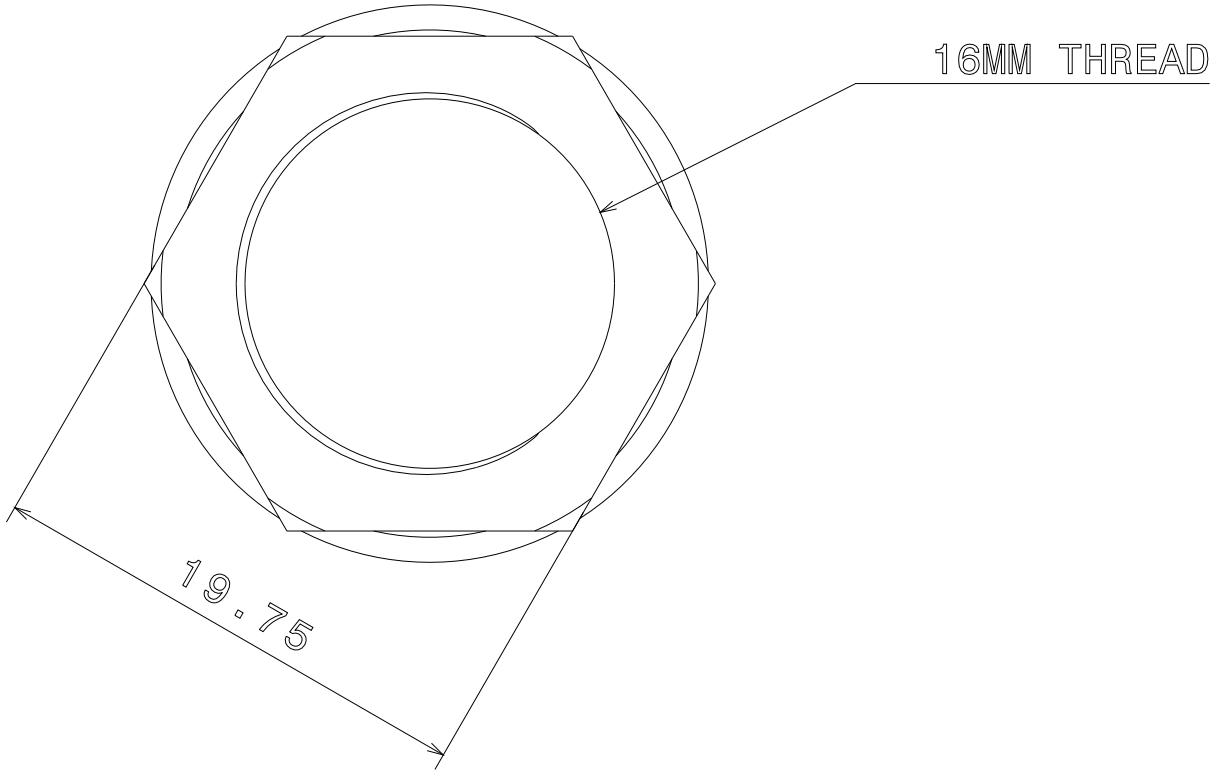

Top view