Product Code	Re-order code	Finish	Barcode
RH.DKDV.PNP	10826	Polish Nickle	5055564210520

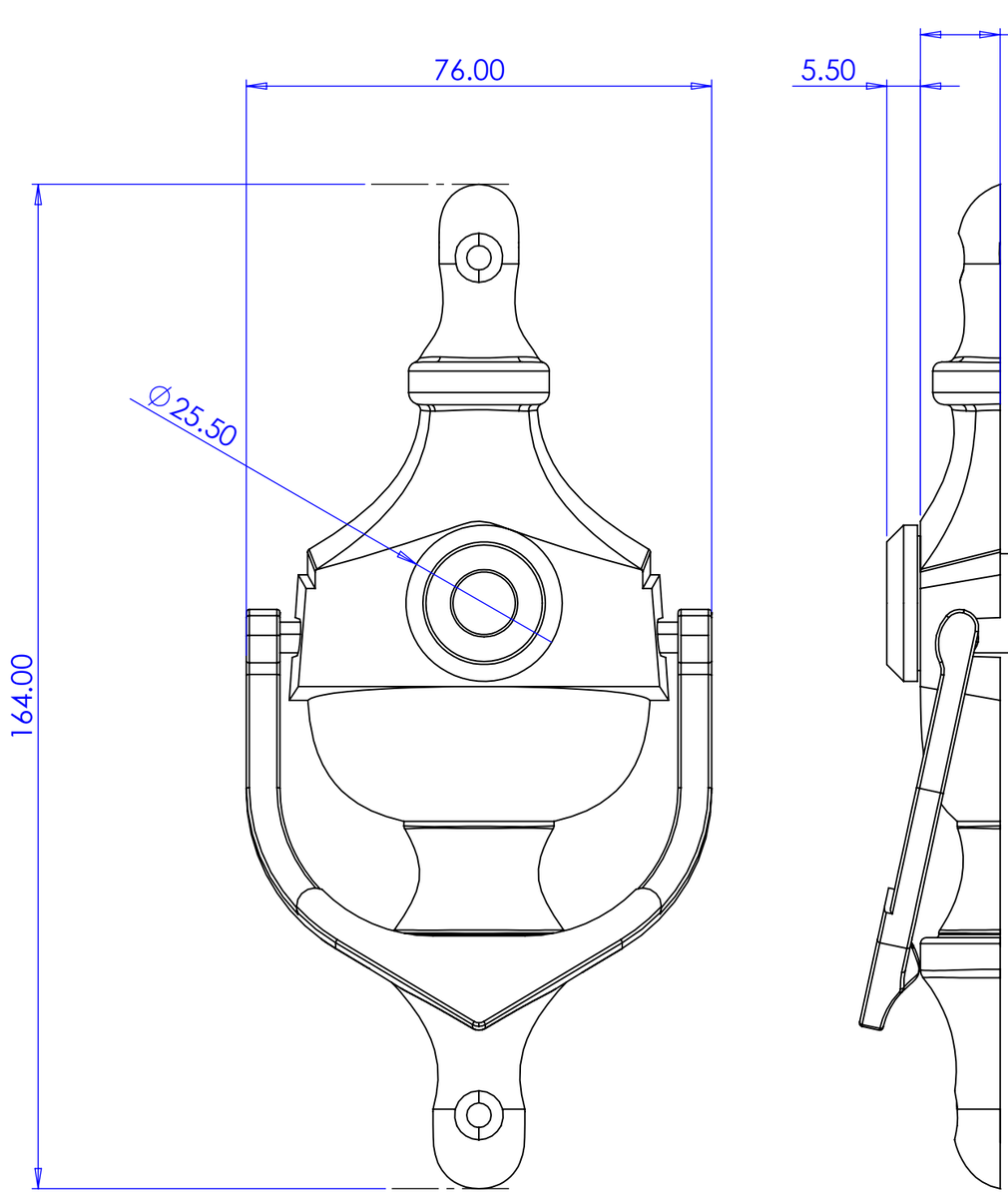

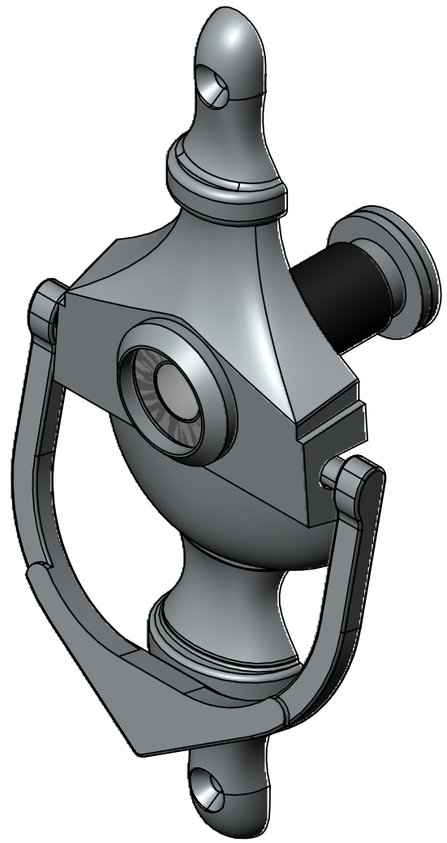

UNLESS OTHERWISE SPECIFIED;
- ALL DIMENSIONS IN mm
- ALL BASIC DIMENSIONS
- IF IN DOUBT PLEASE CONTACT RUTLAND.
- REMOVE ALL BURRS AND SHARP EDGES.

MODEL REV:

UOS Tolerances in this drawing are Medium

	Linear (all in mm)				Angular
	0.5 - 30	30 - 400	400 - 1000	>1000	
Fine	±0.1	±0.15	±0.3	±0.5	±0.25°
Medium	±0.2	±0.3	±0.8	±1.2	±0.5°
Coarse	±0.5	±0.8	±2.0	±3.0	±1°

DESCRIPTION
Door Knocker and Viewer Set, Urn Style

SCALE 1:1

DWN BY: C.C.
DATE: 04/07/2023

THIS DRAWING IS THE PROPERTY AND COPYRIGHT OF RUTLAND TRADING CO. Ltd. NO PART MAY BE REPRODUCED, DISCLOSED OR USED EXCEPT AS AUTHORISED BY CONTRACT OR OTHER WRITTEN PERMISSION. THIS DOCUMENT IS APPROVED AND MAINTAINED UNDER ELECTRONIC CONFIGURATION CONTROL

DWG NO RH.DKDV

REV 0

RUTLAND TRADING CO. LTD

WWW.RUTLANDUK.CO.UK

FINISH: SEE NOTES
COLOUR: SEE NOTES
COLOUR FINISH: SEE NOTES

3rd Angle Projection

SIZE A3

SHEET 1 OF 1