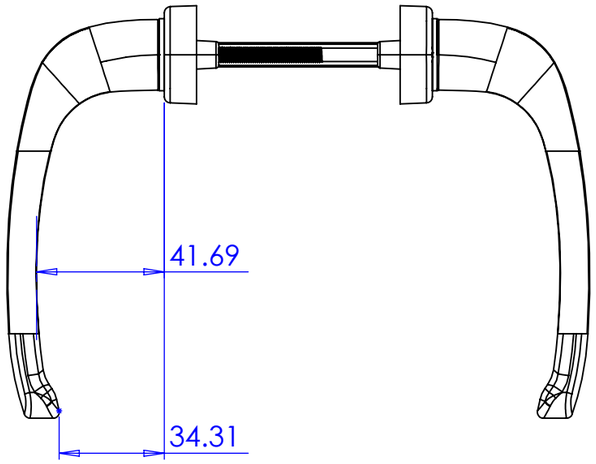

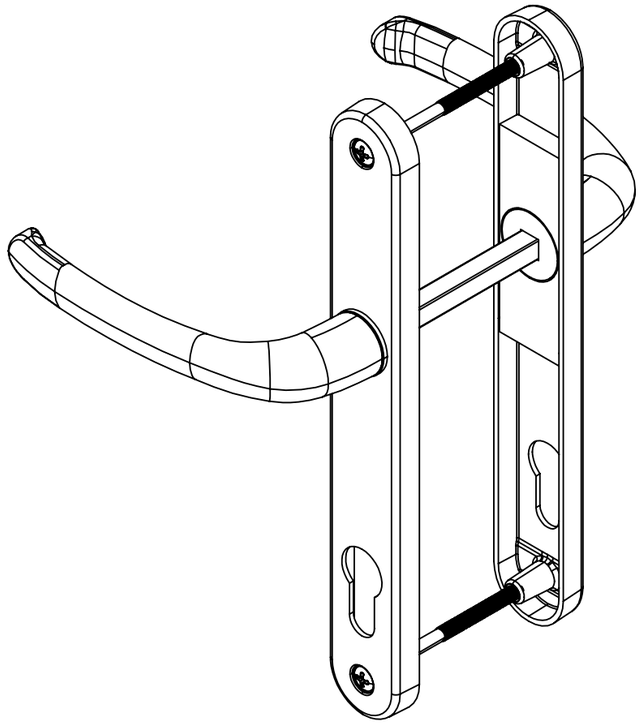

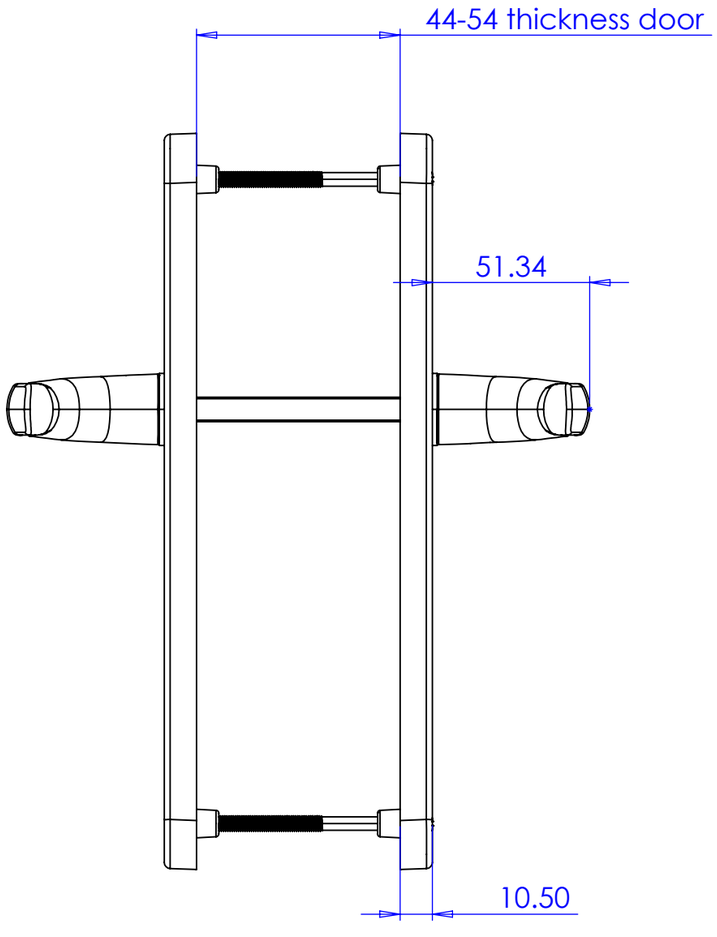

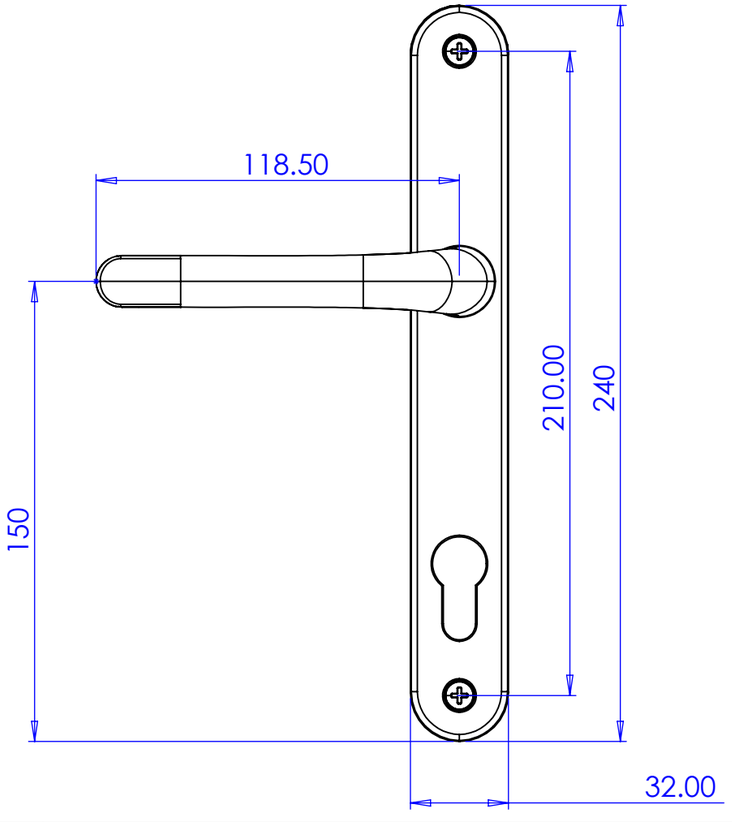

UNLESS OTHERWISE SPECIFIED;
- ALL DIMENSIONS IN mm
- ALL BASIC DIMENSIONS
- IF IN DOUBT PLEASE CONTACT RUTLAND.
- REMOVE ALL BURRS AND SHARP EDGES.

MODEL REV:

UOS Tolerances in this drawing are Medium

	Linear (all in mm)				Angular
	0.5 - 30	30 - 400	400 - 1000	>1000	
Fine	±0.1	±0.15	±0.3	±0.5	±0.25°
Medium	±0.2	±0.3	±0.8	±1.2	±0.5°
Coarse	±0.5	±0.8	±2.0	±3.0	±1°

DESCRIPTION: RH.RLB

SCALE: 1:2

DWN BY: C.C.
DATE: 11/02/2025

THIS DRAWING IS THE PROPERTY AND COPYRIGHT OF RUTLAND TRADING UK Ltd. NO PART MAY BE REPRODUCED, DISCLOSED OR USED EXCEPT AS AUTHORISED BY CONTRACT OR OTHER WRITTEN PERMISSION. THIS DOCUMENT IS APPROVED AND MAINTAINED UNDER ELECTRONIC CONFIGURATION CONTROL

DWG NO

REV: 2

MATERIAL:
MASS:

RUTLAND TRADING UK LTD
WWW.RUTLANDUK.CO.UK

FINISH: SEE NOTES
COLOUR: SEE NOTES
COLOUR FINISH: SEE NOTES

3rd Angle Projection

SIZE: A3

SHEET: 1 OF 1